LiGHT SKY



NEW

SUPER SCOPE PLUS

LED MOVING BSWP 4 IN 1

FEATURES

- It is a moving head light that integrates beam, wash, spot, and profile.
- The optical system is designed with high-precision optical components, featuring a 180mm diameter light-emitting mirror. The fixture projects light over a long distance with high illuminance.
- The cooling system is designed with low-noise capabilities and includes an optional ultra-quiet operating mode.
- Includes 2 rotating gobo wheel, offering a variety of styles. The gobo exhibit high clarity and color consistency from the center to the edges.
- The framing system can rotate ±55°, producing clear and undistorted image edges.
- The overall light output reaches up to 41,000 lumens, and the Color Rendering Index (CRI) can reach 90 with the inclusion of high CRI filters.
- Suitable for high-end performance venues such as theaters, television studios, large-scale concerts, and sports arenas.

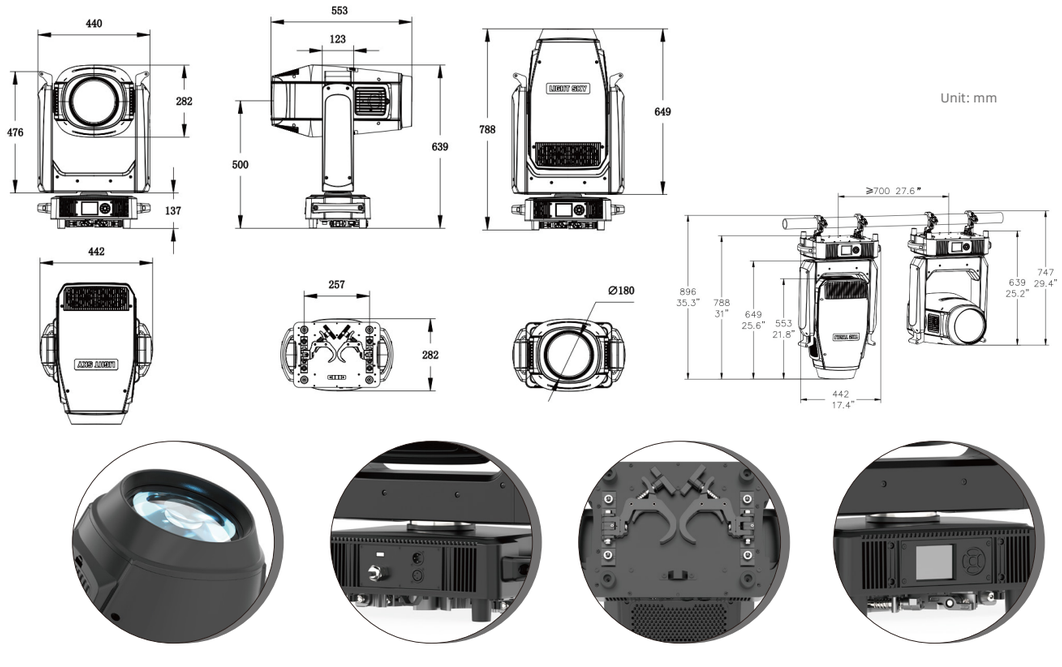

Light source & Optics

- Light Source: 880W White LED module
- Zoom Range: 5.5°- 52°
- Front Lens : High-transmission coated lens, ϕ180 mm
- Colour Temperature Output: 6800 K
- Color Rendering Index (CRI): Ra≥71 / Ra≥90 (with high CRI filter)
- Illuminance: 28, 300 lx@10m
- Lumen Output: 41, 000 lm
- Light Source Theory Life Span: 50,000 h

Color

- CMY infinite color mixing
- CTO color temperature linear adjustment (2800K-6800K)
- 5 color filters + blank + high CRI filter, capable of bi-directional color rainbow effect, bi-color step gradient (linear movement), bi-directional rotating color wheel, random color mode

Gobos

- 2Rotating Gobo Wheel: 14 glass gobos + blank, rotatable, replaceable, with rotating, flowing, and shaking effects
- Rotation Gobo Wheel A: 7 glass gobos + blank; gobo size: Ø26.9mm (outer), Ø21.5 mm (inner)
- Rotation Gobo Wheel B: 7glass gobos + blank; gobo size: Ø26.9 mm (outer), Ø21.5mm (inner)
- Animation wheel
- 8-Direction Framing: 4 shutter blades for fast, smooth cutting, each blade independently controllable, module rotatable ±55°

Effects

- 4-Linear + 4-facet prism, rotatable in both directions, independently switchable and stackable
- light frost + Heavy frost ,independently switchable, stackable
- Motorized iris, linear adjustment from 5-100%, with macro function for multiple effect variations
- Electronic dimmer, linear adjustment from 0-100%, uniform light spot
- Electronic strobe speed adjustable from 1-25 flashes per second
- LED refresh rate: 1000Hz ~ 25KHz

Control and Programming

- Control Channels: 43CH, 55CH (see channel chart for details)
- Protocols: DMX512, RDM, Art-Net, sACN
- Data connection: 3 pin or 5 pin IN/OUT, RJ45(Art-Net)
- Display: LCD screen

Software

- Software upgrade via DMX signal or USB interface
- Silent fan, three operation modes (high brightness / standard / silent)
- Temperature intelligent control, ensuring LED longevity

Pan/Tilt Movement

- Pan: 540°, 8-bit / 16-bit precision
- Tilt: 270° , 8-bit / 16-bit precision
- Automatic reset with error correction
- Tilt Lock

Power and Electrical

- Input Voltage Range: AC 100-240V 50/60Hz
- Max Power Consumption: 1400 W
- Power Factor: 0.996
- Maximum Fixture Current: 7A/220V; 14A/110V

Size and Weight

- Product Dimensions: 442mm × 282mm × 788mm
- Net Weight: 37.5 kg
- Carton Dimensions: 520mm × 370mm × 870mm
- Gross Weight: 42.6 kg

Other

- IP Rate: IP20
- Operating Environment: 0°C ~ 40°C
- Maximum Surface Temperature: 80°C

Factory Configuration

- Power Cable: 1 pc (Part No.: F0200030016)
- Signal Cable: 1 pc (Part No.: C1400060031)
- Safety Rope: 2 pcs (Part No.: F0200010002)
- Clamp: 2 pcs Compatible with tubes of Ø50-60 mm (Part No.: C0499990061)

Optional Accessories/Packaging

- Flycase Part No.: B0100780001
- Flycase Dimensions: 660mm × 520mm × 840mm
- Flycase Gross Weight: 70.5 kg

Color Wheel

5 Colors + blank



Rotation Gobo Wheel A

7+1, Outer diameterϕ26.9mm, Inner diameterϕ21.5mm



Rotation Gobo Wheel B

7+1, Outer diameterϕ26.9mm, Inner diameterϕ21.5mm



Function Effect



Illumination Diagram

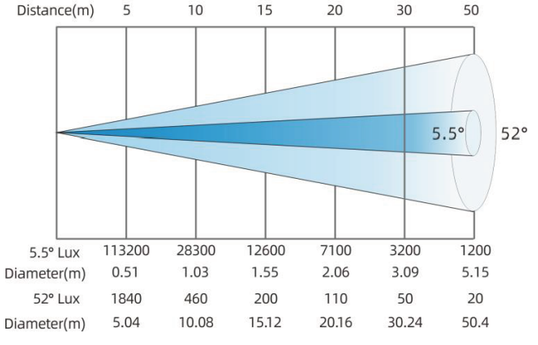

5.5° Lux	113200	28300	12600	7100	3200	1200
Diameter(m)	0.51	1.03	1.55	2.06	3.09	5.15
52° Lux	1840	460	200	110	50	20
Diameter(m)	5.04	10.08	15.12	20.16	30.24	50.4